SIGN	DATE	DESCRIPTION	APPROVER
⚠1			

THIS IS CAD DRAWING, DO NOT REVISE MANUALLY!!!

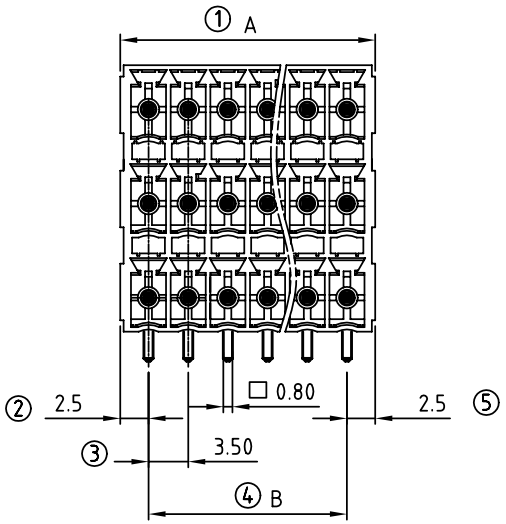

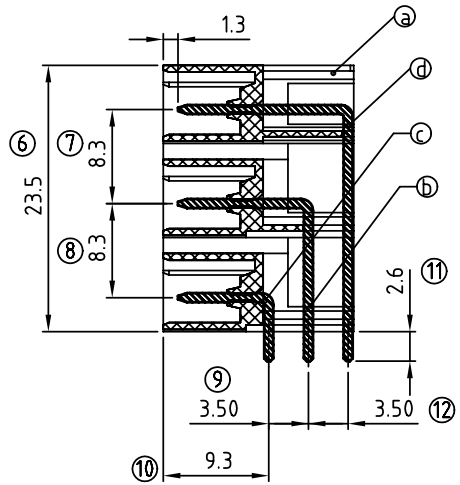

Material:

- Item ⓐ Terminal(housing): PA66 30% GF (UL94V-0)
- Item ⓑ Contact pin of short: copper Tin plated
- Item ⓒ Contact pin of long: copper Tin plated
- Item ⓓ Contact pin of best long: copper Tin plated

Electrical:	cULus
Voltage rating:	160V
Current rating:	5.5A
Withstanding Voltage:	1.32 KV
Operating temperature:	-40°C to +115°C
Soldering temperature:	250°C ±10°C/5 Sec
APPROVAL:	

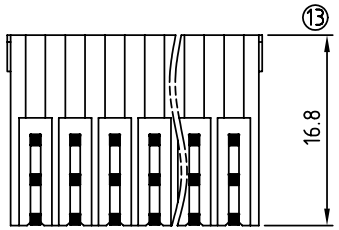

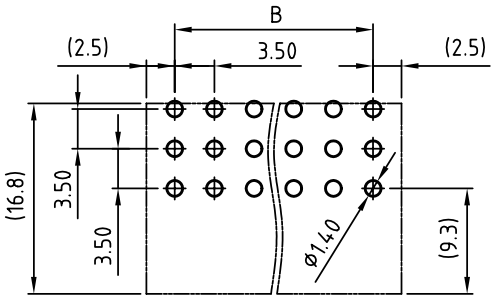

PCB Layout

K3 xx 1 1 x 1 xxxx G

No. OF POLES
- 06: 3×2 POLES
- 09: 3×3 POLES
- :
- :
- 72: 3×24 POLES

COLOR
- 0 Black (RAL9005)
- 3 Orange(RAL2011/P)
- 5 Green(RAL6018/T)
- 6 Blue (RAL5015/A)
- 8 Grey(RAL7035/D)

G: Pb<40000ppm

A000: "@" Logo (Standard)
⚠1 A00A: "ANYTEK" Mark
Any special item by customer requst. please contact sales department.

POLE		3×2	3×3	3×4	3×5	3×6	3×7	3×8	3×9	3×10	3×11	3×12
A		8.50	12.00	15.50	19.00	22.50	26.00	29.50	33.00	36.50	40.00	43.50
B		3.50	7.00	10.50	14.00	17.50	21.00	24.50	28.00	31.50	35.00	38.50
Tol.		±0.15					±0.20					
POLE	3×13	3×14	3×15	3×16	3×17	3×18	3×19	3×20	3×21	3×22	3×23	3×24
A	47.00	50.50	54.00	57.50	61.00	64.50	68.00	71.50	75.00	78.50	82.00	85.50
B	42.00	45.50	49.00	52.50	56.00	59.50	63.00	66.50	70.00	73.50	77.00	80.50
Tol.		±0.25					±0.30					

ANYTEK

CUSTOMER COPY

ALL RIGHTS RESERVED. REPRODUCTION OR ISSUE TO THIRD PARTIES IN ANY FORM WHATEVER IS NOT PERMITTED WITHOUT WRITTEN AUTHORITY FROM THE PROPRIETOR. PROPERTY OF ANYTEK TECHNOLOGY CO., LTD

TITLE	K3 3.5mm W/O Flange Series (90°-Right angle) DIP type					
PART NO.	K3xx11x10000G			DWG NO.	8K30007	
APPROVED	CHECKED	DESIGNED	DRAWN	CUST NO.		Tolerance
		Runner 2010.09.18	Runner 2010.06.28		UNIT: mm	X. ±0.50
					SCALE: NONE	X.X ±0.30
				SHEET: 01/01	REV.: A2	X.XX ±0.10
						X° ±1°