SIGN	DATE	DESCRIPTION	APPROVER
1	1/29'07	Soldering temperature changed from 245° to 250°	Tony
2	2010.01.22	Add the tolerance table	Jacke
3	2010.01.22	The demension is changed from 1.60mm to 1.10mm	Jacke
4	2010.01.22	The demension is changed from 0.40mm to 0.20~0.30mm	Jacke
5	2010.03.31	The material is changed from Brass to Copper	Jacke

THIS IS CAD DRAWING, DO NOT REVISE MANUALLY!!!

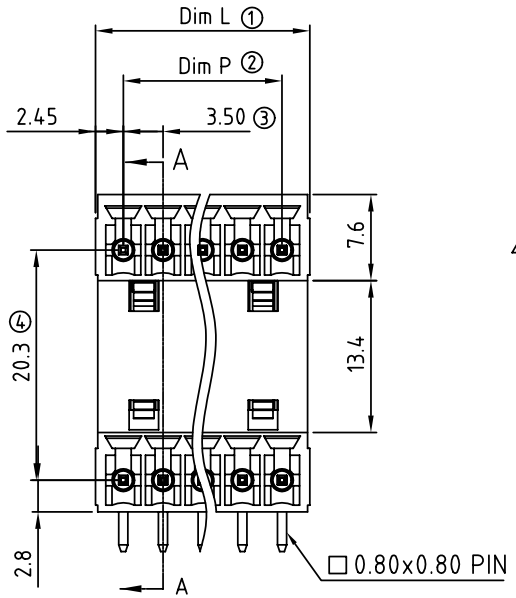

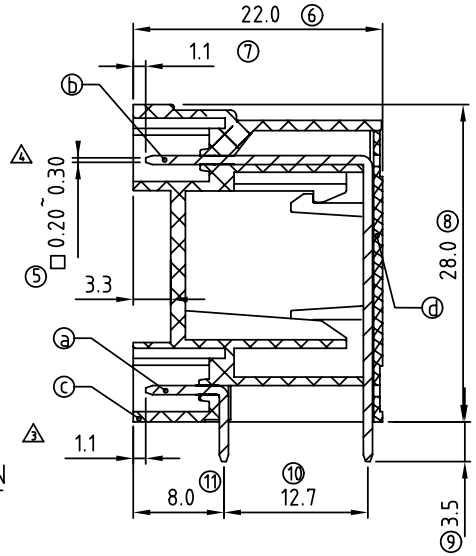

SECTION A-A

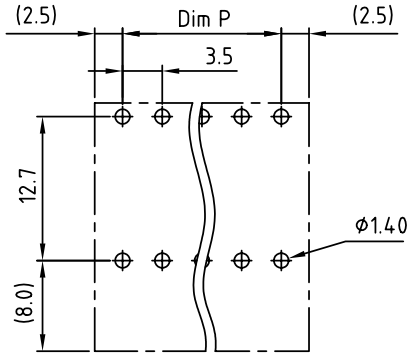

P.C.B. LAYOUT

2

Poles	02	03	04	05	06	07	08	09	10	11	12	13
Dim L	8.40	11.90	15.40	18.90	22.40	25.90	29.40	32.90	36.40	39.90	43.40	46.90
Dim B	3.50	7.00	10.50	14.00	17.50	21.00	24.50	28.00	31.50	35.00	38.50	42.00
TOL	±0.15			±0.20				±0.25				
Poles	14	15	16	17	18	19	20	21	22	23	24	
Dim L	50.40	53.90	57.40	60.90	64.40	67.90	71.40	74.90	78.40	81.90	85.40	
Dim B	45.50	49.00	52.50	56.00	59.50	63.00	66.50	70.00	73.50	77.00	80.50	
TOL	±0.30				±0.35							

Material:

5
- Item ⓐ Short contact pin: Copper Tin plated
- Item ⓑ Long contact pin: Copper Tin plated
- Item ⓒ Terminal(housing): Thermoplastic (UL94V-0)
- Item ⓓ Terminal(cover): Thermoplastic (UL94V-0)

Electrical: cULus

- Voltage rating: 300V
- Current rating: 10A
- Withstanding Voltage: 1.6 KV
- Operating temperature: -40°C to +115°C
- 1 Soldering temperature: 250°C±10°C/5 Sec
- Safety Approval: c UL us

VL xx 1 1 x 1 xxxx G

No. OF POLES
04: 2×2 POLES
:
:
48: 2×24 POLES

COLOR
0 Black (RAL9005)
2 Red (RAL3001/D)
3 Orange(RAL2011/P)
4 Yellow(RAL1018/A)
5 Green(RAL6018/T)
6 Blue (RAL5015/A)
8 Grey(RAL7035/D)

G: Pb<40000ppm

0000: "@" Logo (Standard)
000A: "ANYTEK" Mark
Any special item by customer requst. please contact sales department.

ANYTEK

CUSTOMER COPY

ALL RIGHTS RESERVED. REPRODUCTION OR ISSUE TO THIRD PARTIES IN ANY FORM WHATEVER IS NOT PERMITTED WITHOUT WRITTEN AUTHORITY FROM THE PROPRIETOR. PROPERTY OF ANYTEK TECHNOLOGY CO., LTD

TITLE	VL-3.5mm Close Right-angle Series				
PART NO.	VLxx11x1xxxxG			DWG NO.	8VL0002
APPROVED	CHECKED	DESIGNED	DRAWN	CUST NO.	
		Jacke 2010.03.31	Jacke 2010.01.22	UNIT: mm / SCALE: NONE / SHEET: 01/01	REV.: E

Tolerance	
X.	±0.50
X.X	±0.30
X.XX	±0.10
X°	±1°