| SIGN | DATE | DESCRIPTION | APPROVER |
|---|---|---|---|
| 1 | 2009.10.23 | The design is changed | Jacke |
| 2 | 2010.02.04 | The material is changed from Brass to Copper | Jacke |
| 3 | 2010.06.07 | The flange screw is changed from"-" type to"+/-"type | Cheng Bo |
| | | *THIS IS CAD DRAWING, DO NOT REVISE MANUALLY!!!* | |

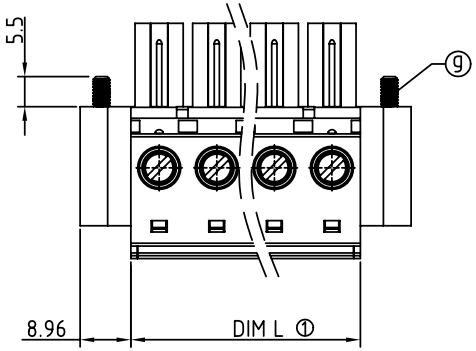


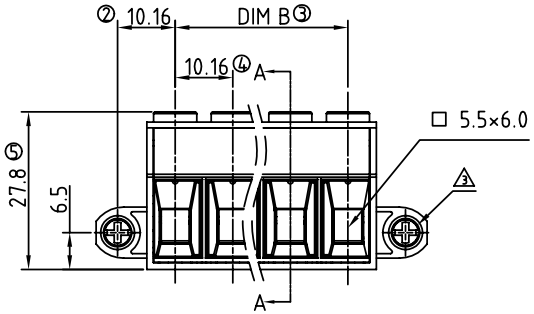


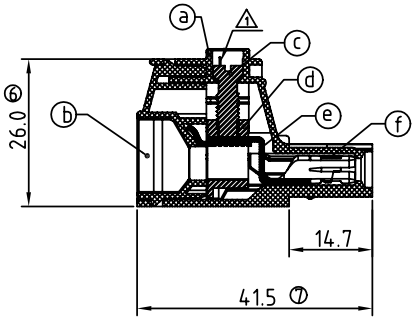


SECTION A-A

## Material

- Item a Terminal body :Thermoplastic ( UL94V-0 )
- Item b Terminal cover:Thermoplastic ( UL94V-0 )
- Item c Terminal screw :Steel Cr3+ Zinc plating "-" slot type
- Item d Clamp: Brass, Ni plated
- 2 Item e Female contact :Copper Tin plated
- Item f Wire guard :Stainless Steel
- 3 Item g With flange screw :Steel Zinc plating M3"+/-"slot type

## Electrical cULus / IEC

- Voltage rating: 300VAC / 1000VAC
- Current rating: 55A / 76A
- Solid wire: 6-20 / 0.5-16mm 2
- Stranded wire: 6-20 / 0.5-16mm2
- Torque: 10.4 Lb-In / 1.2 N.m
- Screw: M4.5
- Wire strip length: 13-14mm
- Withstanding Voltage: 1.6KV / 8KV
- Operating temperature: -40°C to +115°C
- Safety Approval: c us

## PART NO.

EV xx 61 x 1 xxxx G

RoHS
Pb<40,000ppm

Poles
02 2Contacts
03 3Contacts
.....
12 12Contacts

Color
0 Black (RAL9005)
2 Red (RAL3001/D)
3 Orange(RAL2011/P)
4 Yellow(RAL1018/A)
5 Green(RAL6018/T)
6 Blue (RAL5015/A)
8 Grey(RAL7035/D)

0000 Standard @ Logo
000A Standard ANY Logo
Any special item by customer request, please contact sales department.

| Poles | 02 | 03 | 04 | 05 | 06 | 07 | 08 | 09 | 10 | 11 | 12 |
|---|---|---|---|---|---|---|---|---|---|---|---|
| Dim L | 20.16 | 30.32 | 40.48 | 50.64 | 60.80 | 70.96 | 81.12 | 91.28 | 101.44 | 111.60 | 121.76 |
| Dim B | 10.16 | 20.32 | 30.48 | 40.64 | 50.80 | 60.96 | 71.12 | 81.28 | 91.44 | 101.60 | 111.76 |
| TOL | ±0.25 | | | | | ±0.35 | | | | | |

**ANYTEK**

**CUSTOMER COPY**

ALL RIGHTS RESERVED. REPRODUCTION OR ISSUE TO THIRD PARTIES IN ANY FORM WHATEVER IS NOT PERMITTED WITHOUT WRITTEN AUTHORITY FROM THE PROPRIETOR. PROPERTY OF ANYTEK TECHNOLOGY CO., LTD

| | | | | | |
|---|---|---|---|---|---|
| TITLE | EV10.16 Series 2p-12p (W/F) | | | | |
| PART NO. | EVxx61x1xxxxG | | | DWG NO. | 8EV0002 |
| APPROVED | CHECKED | DESIGNED | DRAWN | CUST NO. | |
| | | | Cheng Bo 2010.06.07 | UNIT: mm | |
| | | | | SCALE: NONE | |
| | | | | SHEET: 01/01 | REV.: F |

| Tolerance | |
|---|---|
| X. | ±0.50 |
| X.X | ±0.30 |
| X.XX | ±0.10 |
| X° | ±1° |